Lutz® The Fluid Managers

JESCO®

Horizontal Container Pump Lutz B200

Container Emptying: The compact solution

For optimum transfer of thin-bodied, light or low viscous liquids

Safety is our Concern

Horizontal Container Pump Lutz B200

Different materials for a wide range of applications

This very compact pump is a great alternative when conventional vertical drum pumps cannot be used e.g. for containers which are stored in shelves.

In cases where access to the IBC container from above is not possible, the new horizontal Lutz B200 is directly connected to the bottom outlet valve. The hydraulic capacity is much higher compared with a hydrostatic outlet.

In combination with delivery hose and nozzle, this pump allows controlled filling and can also be operated against a closed valve.

Lutz B200 PVDF

Lutz B200 SS in food version

Lutz B200 SS in explosion-proof version

Product Features:

- Centrifugal pump with axial impeller in compact design, **low space requirement**
- Directly connected to the bottom outlet valve of the IBC with standard union nut
- **Variable drive concept** (compatible with all universal and compressed air motors)
- **Easy to dismantle**, two-part pump with clamp connections (stainless steel version)
- **No suction hose required,** significantly lower product release during disconnection
- **Explosion-proof** stainless steel versions for applications in Ex-areas (Zone 1 and 2), including check valve
- Significantly **better hydraulic capacity** compared to hydrostatic outlet
- Operation against closed shutoff elements (e.g. ball valve, nozzle) is possible at any time
- **The new PVDF version** for highly aggressive liquids
- **SafetyBox for leakage detection** (optional)

See the video now!

Pump Capacities:

Similar to the conventional Lutz drum and container pumps, the new pump tube can be combined with various universal and compressed air motors[1].

[1] Motors see main catalogue.

Typical liquids being pumped

- Thin-bodied mineral oil products
- Emulsions
- Solvents
- Aqueous solutions
- For highly aggressive alkalis and acids
- Vegetable oils
- Cleaning, care and disinfection agents

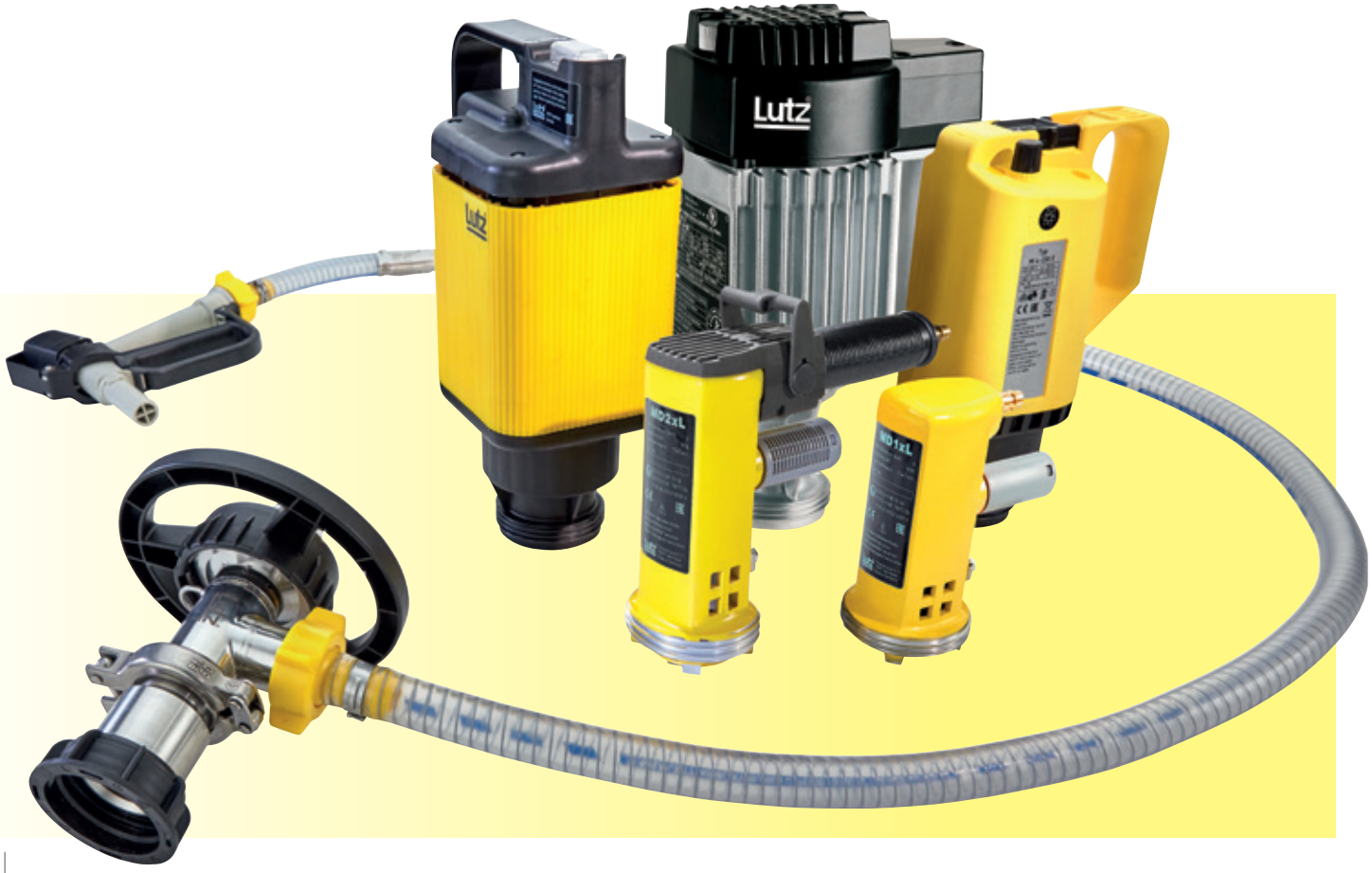

Horizontal Container Pump Lutz B200

Pump tube PVDF

Technical data:	
Quantity:	max. up to 57 gpm
Delivery head:	max. up to 52 ft wc
Viscosity:	max. up to 1000 cps
Spec. gravity:	max. up to 2.8
Temperature:	max. up to 212 °F
Weight:	approx. 1.43 lbs
Materials:	PVDF, Hastelloy-C, FPM, Carbon, SIC, PTFE, ETFE

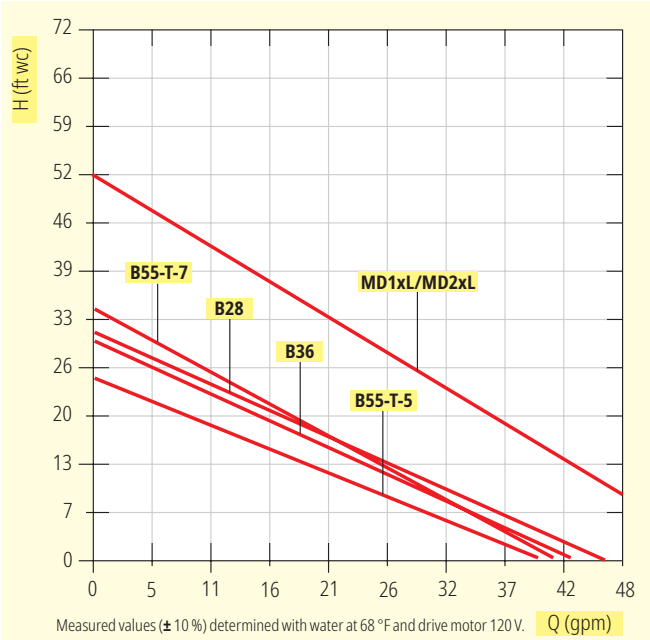

1. The Lutz hand wheel connects motor and pump and allows for quick disconnection
2. Pressure joint with thread
3. The union nut enables a quick mounting at the outlet of the container

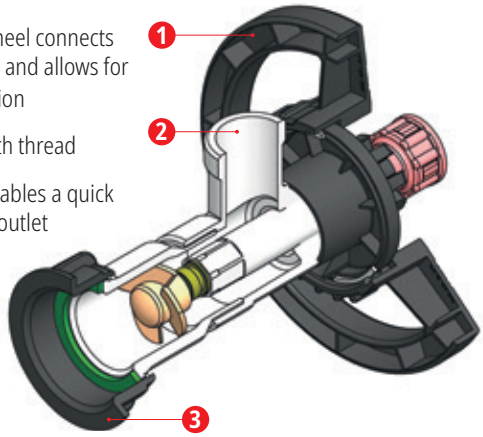

Recommended accessories:

Ref.-No.	Description	
0208-193	**Turnbuckle** Alleviates the strain on the outlet connection when using heavy motors	
0208-192	**Mounting bracket** Alleviates the strain on the outlet connection when using heavy motors, if turnbuckle cannot be used	

The following sets are available for the Lutz B200 PVDF:

Includes:	Pump tube Lutz B200 PVDF	Set Lutz B200 PVDF conc. acids and alkalis	Pump tube Lutz B200 PVDF with SafetyBox*	Set Lutz B200 PVDF conc. acids and alkalis SafetyBox*
Pump tube B200 PVDF 41-R-MS	✓	✓	✓	✓
78" special chemical hose DN 19 with PVDF connection	–	✓	–	✓
Nozzle PVDF	–	✓	–	✓
Monitoring module SafetyBox	–	–	✓	✓
16.4 ft power supply cable, 230 V	–	–	✓	✓
Ref.-No.	**0123-420**	**0205-291**	**0205-290**	**0205-292**
Ref.-No. Additional price seal kit FFPM/PE	**0123-110**			

*Use motors with low-voltage release, see main catalogue.

Horizontal Container Pump Lutz B200

Pump tube SS

Technical data:	
Quantity:	max. up to 64.5 gpm
Delivery head:	max. up to 49 ft wc
Viscosity:	max. up to 1000 cps
Spec. gravity:	max. up to 2.8
Temperature:	max. up to 212 °F
Weight:	approx. 3 lbs
Materials:	Stainless steel (316 Ti), ETFE, PTFE Carbon, ceramic, FPM or EPDM

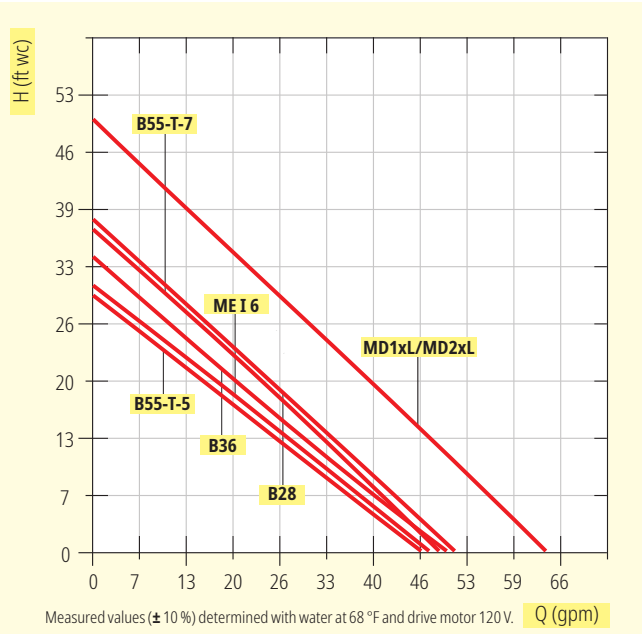

Measured values (± 10 %) determined with water at 68 °F and drive motor 120 V.

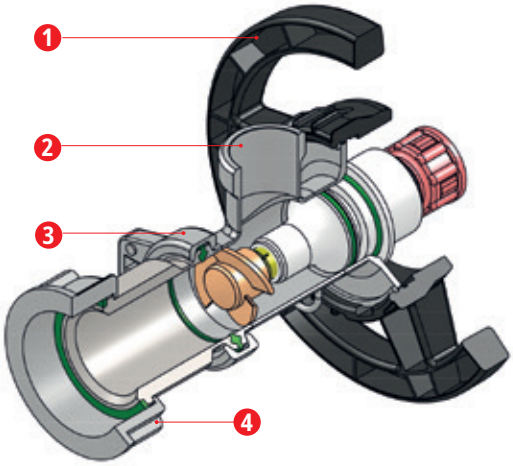

1. The Lutz hand wheel connects motor and pump and allows for quick disconnection
2. Pressure joint with thread
3. The union nut enables a quick mounting at the outlet of the container
4. Pressure joint with thread or clamp connection

Several pump tubes are available for container pump Lutz B200 SS:

Ref.-No.	Description
0151-400	Pump Tube B200 SS 41-R-MS FPM, OT 1 1/4“
0151-401	Pump Tube B200 PURE SS 41-R-MS FPM, Clamp
0151-402	Pump Tube B200 PURE SS 41-R-MS EPDM, Clamp
0151-403	Pump Tube B200 Ex PURE SS 41-R-MS FPM, Clamp
0151-404	Pump Tube B200 Ex PURE SS 41-R-MS EPDM, Clamp

Range of accessories

Pump tubes B200

Product detail	Specification			Order No.
	Adapter fitting Tri-Clamp (316 L) DN 32 / G 1 1/4 OT		for B200 SS	**0370-104**
	Tri-Clamp locking clamp (316 L), DN 25/32/40		for B200 SS	**0370-088**
	Tri-Clamp seal			
	EPDM	DN 32	for B200 SS	**0314-596**
	FPM	DN 32	for B200 SS	**0314-597**
	Check valves SS			
	FPM	Clamp DN 32	for B200 SS	**0208-202**
	EPDM	Clamp DN 32	for B200 SS	**0208-203**
	Mounting bracket B200 Alleviates the strain on the outlet connection when using heavy motors, if turnbuckle cannot be used			**0208-192**
	Turnbuckle Alleviates the strain on the outlet connection when using heavy motors			**0208-193**
	Wing nut stainless steel for outrun piece S60 x 6, with retaining ring		for B200 SS	**0151-416**
	Electronic flow meter, TR3-PVDF series For efficient flow rate measuring of various liquids. Ease of handling, compact design, connection 1 1/4 Material polyvinylidene flouride (PVDF) For more details see flow meter brochure.			
	Hose connections See accessories drum pump brochure			
	Hoses See accessories drum pump brochure			
	Nozzles See accessories drum pump brochure			

Monitoring module SafetyBox for container pump B200 PVDF

Dynamic seals are subject to wear and can lead to leakage

The consequences are:
- Environmental contamination
- Health risk

Dynamic seals should be replaced after specified operating times. Since the operating time of mobile pumps is less easy to monitor, there is a higher probability that wearing parts will be used longer than expected. The solution is the SafetyBox monitoring module with which leaks in the mechanical seal can be detected.

Benefits:

- Safe operation
- Low cost solution
- Simple installation, can be retrofitted at any time
- Can also be used for other Lutz drum pumps

Function:

- **Detects leakage** of conductive liquids
- **Visual and acoustic signals for leakage detection** (siren, lamp)
- **Emergency stop function** of the motor in case of leakage
- **Plug & Play**
- **Easy installation** by attaching a leakage sensor to the connecting head of the pump

Technical data SafetyBox:	
Voltage:	230 V
Frequency:	50 Hz
Max. switching current:	8 A
Type of protection:	IP 54
Ambient temperature:	50-122 °F
Weight:	2.3 lbs
Minimum conductivity of the detectable liquid: 10 µS/cm	
Sensitivity adjustment range: 5-100 kΩ	

SafetyBox for container pump Lutz B200 PVDF

Ref.-No.	Description
0208-450	**Monitoring module SafetyBox**
0211-155	**Power supply cable,** 230 V, 16.4 ft long

Additional accessories when using a compressed air motor

Ref.-No.	Description
0211-151	**Connecting cable SLOW valve,** 16.4 ft long, 230 V, 50 Hz
5000-167	**2/2-way solenoid valve** blocks the air supply to the drive motor, Brass G 3/8 IT

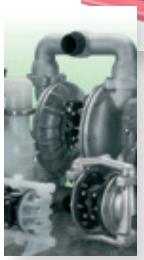

Lutz offers the optimum solution for professional Fluid Management

Drum and Container Pumps · Flow Meters · Double Diaphragm Pumps

Lutz Pumps, Inc.

1160 Beaver Ruin Road
Norcross, GA 30093-4898
Phone: (770) 925-1222
(800) 843-3901
Fax: (770) 923-0334

www.lutzpumpsamerica.com
e-mail: info@lutzpumpsamerica.com

State of the art 2020.05 Printed in USA